GIGABYTE™

B150M-HD3 DDR3 R1.0

Power Sequence

JEFF.KO

B150M-HD3 DDR3 Power Sequence
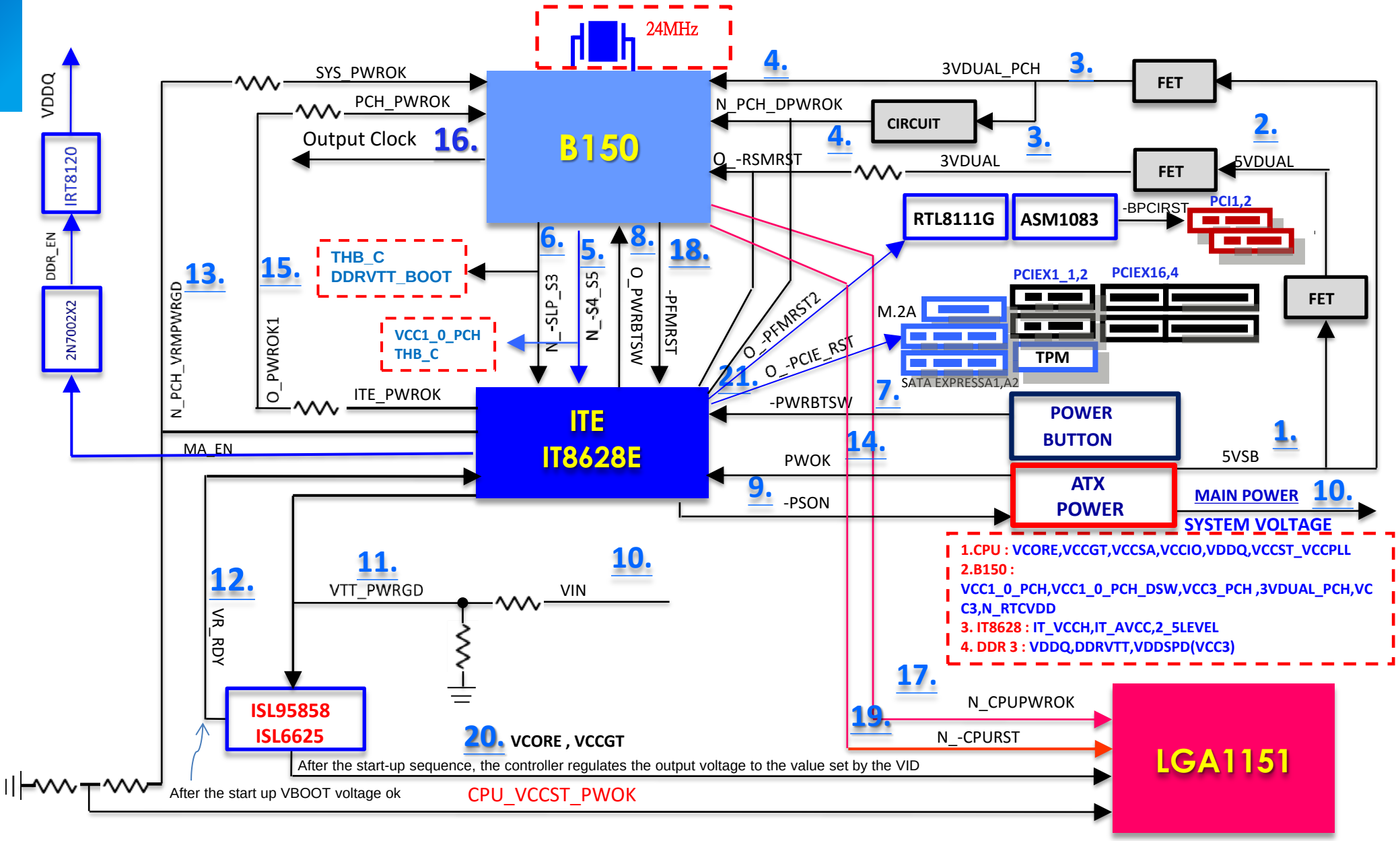
Rev 1.0